# Work Order ID 72132

*Tuesday, July 19, 2011 12:43:10 PM*



**Item ID:** D3278-041 **Accept** **Setup Start** **Stop**

**Revision ID:**

**Item Name:** Support Assembly

**Start Date:** 7/19/2011 **Start Qty:** 40.00 **Cust Item ID:**

**Required Date:** 7/25/2011 **Req'd Qty:** 40.00 **Customer:**

**Reference:**

**Approvals:** **Process Plan:** _____ **Date:** 11-07-19 **Tooling:** _____ **Date:** _____ **Run Start** **Stop**

**QC:** _____ **Date:** _____ **SPC (Y/N):** _____ **Date:** _____

| Sequence ID/ Work Center ID | Operation Description | Set Up/ Run Hours | Tool ID | Tool # | Plan Code | Accept Qty | Reject Qty | Reject Number | Insp. Stamp |
|---|---|---|---|---|---|---|---|---|---|
| **Draw Nbr** | **Revision Nbr** | | | | | | | | |
| D3278 | Rev C | | | | | | | | |
| 100 | Small Fab | 0.00 | | | | | | | |
| Small Fab | | | | | | | | | |
| Small Fab | **Memo** | 0.00 | | | | | | | |
| Small Fab | Rivet spacers with support as per Dwg D3278. | | | | | | | | |
| 110 | QC5- Inspect part completeness to step on W/O | 0.00 | | | | | | | |
| QC | **Memo** | 0.00 | | | | | | | |
| Quality Control | | | | | | | | | |
| 120 | Small Fab | 0.00 | | | | | | | |
| Small Fab | | | | | | | | | |
| Small Fab | **Memo** | 0.00 | | | | | | | |
| Small Fab | Assemble support as per Dwg D3278.□***DO NOT TIGHTEN BOLTS***□Identify as D3278-041 | | | | | | | | |

11/09/23 40

11/09/23

11/09/23 40

Dart Aerospace Ltd

| W/O: | | WORK ORDER CHANGES | | | | | |
|---|---|---|---|---|---|---|---|
| DATE | STEP | PROCEDURE CHANGE | By | Date | Qty | Approval Chief Eng / Prod Mgr | Approval QC Inspector |
| | | | | | | | |
| | | | | | | | |

**Part No:** _____ **PAR #:** _____ **Fault Category:** _____ **NCR:** Yes No **DQA:** _____ **Date:** _____

**Resolution:** _____ **Disposition:** _____ **QA: N/C Closed:** _____ **Date:** _____

| NCR: | | WORK ORDER NON-CONFORMANCE (NCR) | | | | | | |
|---|---|---|---|---|---|---|---|---|
| DATE | STEP | Description of NC Section A | Corrective Action Section B | | | Verification Section C | Approval Chief Eng | Approval QC Inspector |
| | | | Initial Chief Eng | Action Description Chief Eng | Sign & Date | | | |
| | | | | | | | | |
| | | | | | | | | |
| | | | | | | | | |

**NOTE:** Date & initial all entries

H:\fFORMS\Quality Assurance\approved QA\NCRWO RevE

# Work Order ID 72132

*Tuesday, July 19, 2011 12:43:10 PM*



**Item ID:** D3278-041 **Accept** **Setup** **Start** **Stop**

**Revision ID:**

**Item Name:** Support Assembly

**Start Date:** 7/19/2011 **Start Qty:** 40.00 **Cust Item ID:**

**Required Date:** 7/25/2011 **Req'd Qty:** 40.00 **Customer:**

**Reference:**

**Run** **Start** **Stop**

**Approvals:** **Process Plan:** _____ **Date:** _____ **Tooling:** _____ **Date:** _____

**QC:** _____ **Date:** _____ **SPC (Y/N):** _____ **Date:** _____

| Sequence ID/ Work Center ID | Operation Description | Set Up/ Run Hours | Tool ID | Tool # | Plan Code | Accept Qty | Reject Qty | Reject Number | Insp. Stamp |
|---|---|---|---|---|---|---|---|---|---|
| 130 QC Quality Control | QC5- Inspect part completeness to step on W/O | 0.00 | | | | 40 counts | | | |
| | Memo | 0.00 | | | | | | | |
| 140 Packaging Packaging | Identify as per dwg & Stock Location: 481 | 0.00 | | | | 11/9/23 | | SL (40) | |
| | Memo | 0.00 | | | | | | | |
| 150 QC Quality Control | QC21- Final Inspection - Work Order Release | 0.00 | | | | | | 11/9/23 | |
| | Memo | 0.00 | | | | | | | |

8 11/09/23

MF 11-09-23

Dart Aerospace Ltd

| W/O: | | WORK ORDER CHANGES | | | | | |
|---|---|---|---|---|---|---|---|
| DATE | STEP | PROCEDURE CHANGE | By | Date | Qty | Approval Chief Eng / Prod Mgr | Approval QC Inspector |
| | | | | | | | |
| | | | | | | | |

**Part No:** _____ **PAR #:** _____ **Fault Category:** _____ **NCR:** Yes No **DQA:** _____ **Date:** _____

**Resolution:** _____ **Disposition:** _____ **QA: N/C Closed:** _____ **Date:** _____

| NCR: | | WORK ORDER NON-CONFORMANCE (NCR) | | | | | | |
|---|---|---|---|---|---|---|---|---|
| DATE | STEP | Description of NC Section A | Corrective Action Section B | | | Verification Section C | Approval Chief Eng | Approval QC Inspector |
| | | | Initial Chief Eng | Action Description Chief Eng | Sign & Date | | | |
| | | | | | | | | |
| | | | | | | | | |
| | | | | | | | | |

**NOTE:** Date & initial all entries

# Picklist Print

*Tuesday, July 19, 2011 12:43:17 PM*



**Work Order ID:** 72132

**Parent Item:** D3278-041

**Parent Item Name:** Support Assembly

**Start Date:** 7/19/2011 **Required Date:** 7/25/2011

**Start Qty:** 40.00 **Required Qty:** 40.00

**Comments:** IPP: □A□04.04.19□New issue□KJ/JLM□
IPP B 07.08.21 Chg rivet per PAR185 EC Verified by: JLM

| Component Item ID/ Item Name | Replacement Item ID | Mfg/ Purch | Bin Item | Primary Location | Last Location | Route Seq ID | Unit of Measure | Qty on Hand | Qty per Kit | Total Qty | Qty Issued | Date Issued | Status |
|---|---|---|---|---|---|---|---|---|---|---|---|---|---|
| D3278-1 | | Manufactured | No | | | 100 | Each | 5.0000 | 1 | 40 | | | |
| Support | | | | | | | | | | | | | |
| | | | | **Location** | | | **Loc Qty** | | **Loc Code** | | | | |
| | | | | GA | | | 5 | | | | | | |
| | | | | | 68956 | | 5 | | | | | | |
| D3278-2 | | Manufactured | No | | | 100 | Each | 0.0000 | 1 | 40 | | | |
| Support | | | | | | | | | | | | | |
| D3278-3 | | Manufactured | No | | | 100 | Each | 100.0000 | 1 | 40 | | | |
| Spacer | | | | | | | | | | | | | |
| | | | | **Location** | | | **Loc Qty** | | **Loc Code** | | | | |
| | | | | GA | | | 100 | | | | | | |
| | | | | | 68340 | | 34 | | | | | | |
| | | | | | 70984 | | 66 | | | | | | |
| MS21042L4 | | Purchased | No | | | 100 | Each | 3,764.000 | 2 | 80 | | | |
| Nut | | | | | | | | | | | | | |
| | | | | **Location** | | | **Loc Qty** | | **Loc Code** | | | | |
| | | | | ST300 | | | 3764 | | | | | | |
| | | | | | 117441 | | 1517 | | | | | | |
| | | | | | 117601 | | 747 | | | | | | |
| | | | | | 117885 | | 1500 | | | | | | |

11/09/23

B69889 35x

5

B69888 40x

11/09/23

11/09/23

34

6

11-09-23.

40

40

Dart Aerospace Ltd

| W/O: | | WORK ORDER CHANGES | | | | | |
|---|---|---|---|---|---|---|---|
| DATE | STEP | PROCEDURE CHANGE | By | Date | Qty | Approval Chief Eng / Prod Mgr | Approval QC Inspector |
| | | | | | | | |
| | | | | | | | |

**Part No:** _____ **PAR #:** _____ **Fault Category:** _____ **NCR:** Yes No **DQA:** _____ **Date:** _____

**Resolution:** _____ **Disposition:** _____ **QA: N/C Closed:** _____ **Date:** _____

| NCR: | | WORK ORDER NON-CONFORMANCE (NCR) | | | | | | |
|---|---|---|---|---|---|---|---|---|
| DATE | STEP | Description of NC Section A | Corrective Action Section B | | | Verification Section C | Approval Chief Eng | Approval QC Inspector |
| | | | Initial Chief Eng | Action Description Chief Eng | Sign & Date | | | |
| | | | | | | | | |
| | | | | | | | | |
| | | | | | | | | |

**NOTE:** Date & initial all entries

H:\fFORMS\Quality Assurance\approved QA\NCRWO RevE

# Picklist Print

*Tuesday, July 19, 2011 12:43:17 PM*

**Work Order ID:** 72132

**Parent Item:** D3278-041

**Parent Item Name:** Support Assembly

**Start Date:** 7/19/2011 **Required Date:** 7/25/2011

**Start Qty:** 40.00 **Required Qty:** 40.00

| | | | | | | | | | |
|---|---|---|---|---|---|---|---|---|---|
| AN4-13A | | Purchased | No | 120 | Each | 1,226.000 | 2 | 80 | SP 11-09-23. |
| Bolt | | | | | | | | | |

| Location | | Loc Qty | Loc Code | |
|---|---|---|---|---|
| ST357 | | 1226 | | |
| | 117962 | 32 | | |
| | 118078 | 594 | | |
| | 118350 | 300 | | |
| | 118351 | 300 | | 80X |

| | | | | | | | | | |
|---|---|---|---|---|---|---|---|---|---|
| AN960JD416 | NAS1149D0463J | Purchased | No | 120 | Each | 0.0000 | 4 | 160 | SP 11-09-23 |
| Washer | | | | | | | | | |

m118384 160X

| | | | | | | | | | |
|---|---|---|---|---|---|---|---|---|---|
| D2230-1 | | Manufactured | No | 120 | Each | 159.0000 | 2 | 80 | SP 11-09-23 |
| Lug | | | | | | | | | |

| Location | | Loc Qty | Loc Code | |
|---|---|---|---|---|
| ST476 | | 159 | | |
| | 67826 | 6 | | |
| | 69179 | 53 | | 3X |
| | 69821 | 100 | | 77 |

| | | | | | | | | | |
|---|---|---|---|---|---|---|---|---|---|
| MS20426AD3-6 | | Purchased | No | 120 | Each | 3,525.000 | 4 | 160 | 11/09/23 |
| Rivet | | | | | | | | | |

| Location | | Loc Qty | Loc Code | |
|---|---|---|---|---|
| ST316 | | 3525 | | |
| | 105055 | 115 | | |
| | 116289 | 3410 | | 160 |

Dart Aerospace Ltd

| W/O: | | WORK ORDER CHANGES | | | | | |
|---|---|---|---|---|---|---|---|
| DATE | STEP | PROCEDURE CHANGE | By | Date | Qty | Approval Chief Eng / Prod Mgr | Approval QC Inspector |
| | | | | | | | |
| | | | | | | | |

**Part No:** _____ **PAR #:** _____ **Fault Category:** _____ **NCR:** Yes No **DQA:** _____ **Date:** _____

**Resolution:** _____ **Disposition:** _____ **QA: N/C Closed:** _____ **Date:** _____

| NCR: | | WORK ORDER NON-CONFORMANCE (NCR) | | | | | | |
|---|---|---|---|---|---|---|---|---|
| DATE | STEP | Description of NC Section A | Corrective Action Section B | | | Verification Section C | Approval Chief Eng | Approval QC Inspector |
| | | | Initial Chief Eng | Action Description Chief Eng | Sign & Date | | | |
| | | | | | | | | |
| | | | | | | | | |
| | | | | | | | | |

**NOTE:** Date & initial all entries

H:\FORMS\Quality Assurance\approved QA\NCRWO RevE

| DESIGN | DRAWN BY | DART AEROSPACE LTD<br>HAWKESBURY, ONTARIO, CANADA | |
|---|---|---|---|
| CHECKED | APPROVED | DRAWING NO.<br>D3278 | REV. C<br>SHEET 1 OF 3 |
| DATE<br>07.07.24 | | TITLE<br>SUPPORT ASSEMBLY | SCALE<br>NTS |

| | | |
|---|---|---|
| A | 04.03.03 | NEW ISSUE |
| B | 05.03.31 | CHANGE DIM/TOL TO ENSURE FIT |
| C | 07.07.24 | CHANGED RIVETS PER PAR #185 |

RELEASED 07 08 48

# D3278-041 SUPPORT ASSEMBLY

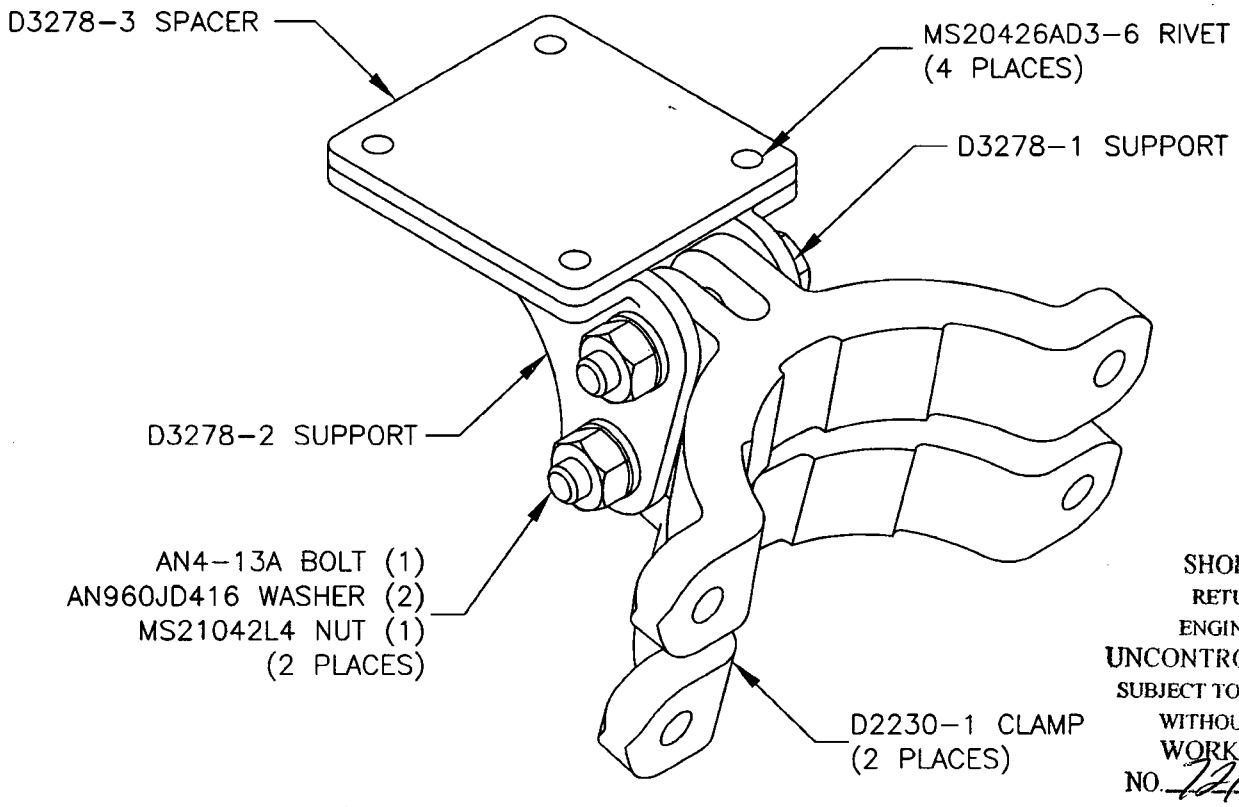


SHOP COPY
RETURN TO
ENGINEERING
UNCONTROLLED COPY
SUBJECT TO AMENDI
WITHOUT NOTIC
WORK ORDE
NO. 121132

11-07-19

| Qty | Part Number | Description |
|---|---|---|
| X | D3278-041 | SUPPORT ASSEMBLY |
| | | |
| 2 | D2230-1 | CLAMP |
| 1 | D3278-1 | SUPPORT |
| 1 | D3278-2 | SUPPORT |
| 1 | D3278-3 | SPACER |
| | | |
| 2 | AN4-13A | BOLT |
| 4 | AN960JD416 | WASHER |
| 4 | MS20426AD3-6 | RIVET |
| 2 | MS21042L4 | NUT |

Dart Aerospace Ltd

| W/O: | | WORK ORDER CHANGES | | | | | |
|---|---|---|---|---|---|---|---|
| DATE | STEP | PROCEDURE CHANGE | By | Date | Qty | Approval Chief Eng / Prod Mgr | Approval QC Inspector |
| | | | | | | | |
| | | | | | | | |

Part No: _____ PAR #: _____ Fault Category: _____ NCR: Yes No DQA: _____ Date: _____

Resolution: _____ Disposition: _____ QA: N/C Closed: _____ Date: _____

| NCR: | | WORK ORDER NON-CONFORMANCE (NCR) | | | | | | |
|---|---|---|---|---|---|---|---|---|
| DATE | STEP | Description of NC Section A | Corrective Action Section B | | | Verification Section C | Approval Chief Eng | Approval QC Inspector |
| | | | Initial Chief Eng | Action Description Chief Eng | Sign & Date | | | |
| | | | | | | | | |
| | | | | | | | | |
| | | | | | | | | |

NOTE: Date & initial all entries

H:\FORMS\Quality Assurance\approved QA\NCRWO RevE

| DESIGN | DRAWN BY | DART AEROSPACE LTD<br>HAWKESBURY, ONTARIO, CANADA | |
|---|---|---|---|
| CHECKED | APPROVED | DRAWING NO.<br>D3278 | REV. C<br>SHEET 2 OF 3 |
| DATE<br>07.07.24 | | TITLE<br>SUPPORT ASSEMBLY | SCALE<br>1:1 |

RELEASED 07-08-08

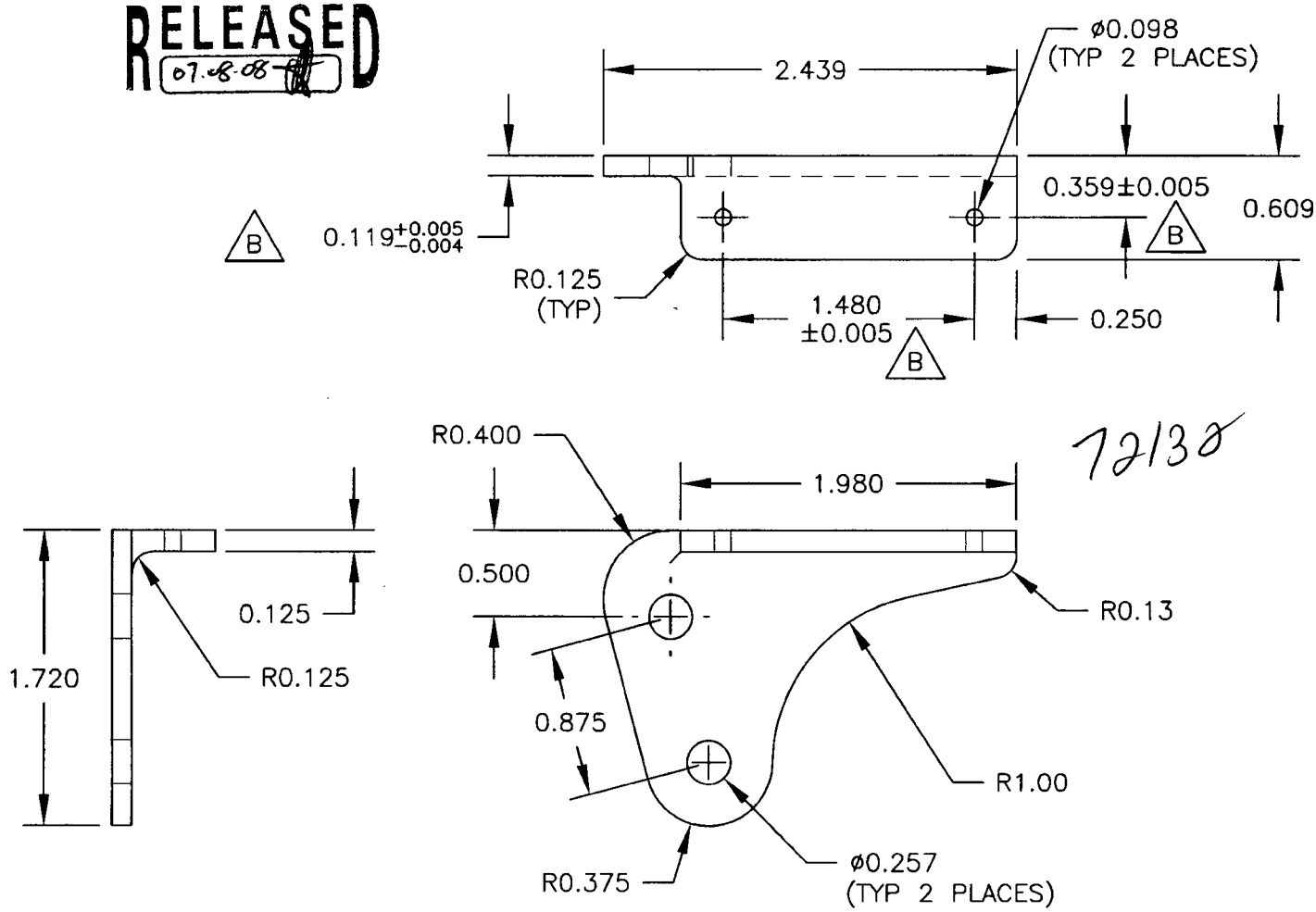


72138

**D3278-1 SUPPORT (SHOWN)**
**D3278-2 SUPPORT (OPPOSITE)**

1) MACHINE PER DWG FILE "D3278-1.SLDPRT"
2) MATERIAL: 6061-T6 (OR 6061-T651/T6510/T6511/T62) BAR
   PER AMS-QQ-A-225/8 (OR AMS 4117/4128/4115/4116)
   PER AMS-QQ-A-200/8 (OR AMS 4160)
   (REF. DART SPEC. M6061T6B)
3) FINISH: CHEMICAL CONVERSION COAT PER DART QSI 005 4.1
   POWDER COAT WHITE (4.3.5.1) PER DART QSI 005 4.3
4) BREAK ALL SHARP EDGES 0.005 TO 0.015
5) TOLERANCES ARE PER DART QSI 018 UNLESS OTHERWISE NOTED
6) ALL DIMENSIONS ARE IN INCHES UNLESS OTHERWISE NOTED

Dart Aerospace Ltd

| W/O: | | WORK ORDER CHANGES | | | | | |
|---|---|---|---|---|---|---|---|
| DATE | STEP | PROCEDURE CHANGE | By | Date | Qty | Approval Chief Eng / Prod Mgr | Approval QC Inspector |
| | | | | | | | |
| | | | | | | | |

**Part No:** _____ **PAR #:** _____ **Fault Category:** _____ **NCR:** Yes No **DQA:** _____ **Date:** _____

**Resolution:** _____ **Disposition:** _____ **QA: N/C Closed:** _____ **Date:** _____

| NCR: | | WORK ORDER NON-CONFORMANCE (NCR) | | | | | | |
|---|---|---|---|---|---|---|---|---|
| DATE | STEP | Description of NC Section A | Corrective Action Section B | | | Verification Section C | Approval Chief Eng | Approval QC Inspector |
| | | | Initial Chief Eng | Action Description Chief Eng | Sign & Date | | | |
| | | | | | | | | |
| | | | | | | | | |
| | | | | | | | | |

**NOTE:** Date & initial all entries

| DESIGN | DRAWN BY | DART AEROSPACE LTD<br>HAWKESBURY, ONTARIO, CANADA | |
|---|---|---|---|
| CHECKED | APPROVED | DRAWING NO.<br>D3278 | REV. C<br>SHEET 3 OF 3 |
| DATE<br>07.07.24 | | TITLE<br>SUPPORT ASSEMBLY | SCALE<br>1:1 |

RELEASED 07.08.08

12132

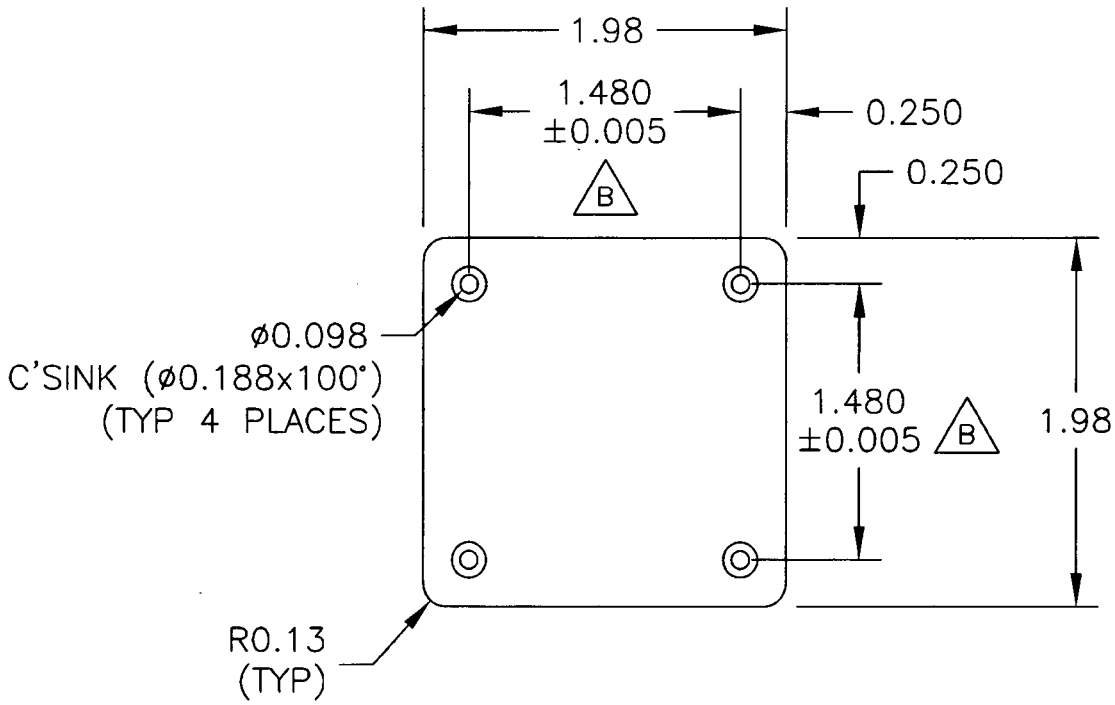


**D3278-3 SPACER**

1) MATERIAL: DELRIN II 150E OR ACETRON GP ACETAL
(REF. DART SPEC. M-DELRIN-B0.125x2.000) OR
DELRIN II 150E OR ACETRON GP ACETAL
(REF. DART SPEC. M-DELRIN-S.125)
2) BREAK ALL SHARP EDGES 0.005 TO 0.015
3) TOLERANCES ARE PER DART QSI 018 UNLESS OTHERWISE NOTED
4) ALL DIMENSIONS ARE IN INCHES UNLESS OTHERWISE NOTED

Dart Aerospace Ltd

| W/O: | | WORK ORDER CHANGES | | | | | |
|---|---|---|---|---|---|---|---|
| DATE | STEP | PROCEDURE CHANGE | By | Date | Qty | Approval Chief Eng / Prod Mgr | Approval QC Inspector |
| | | | | | | | |
| | | | | | | | |

Part No: _____ PAR #: _____ Fault Category: _____ NCR: Yes No DQA: _____ Date: _____

Resolution: _____ Disposition: _____ QA: N/C Closed: _____ Date: _____

| NCR: | | WORK ORDER NON-CONFORMANCE (NCR) | | | | | | |
|---|---|---|---|---|---|---|---|---|
| DATE | STEP | Description of NC Section A | Corrective Action Section B | | | Verification Section C | Approval Chief Eng | Approval QC Inspector |
| | | | Initial Chief Eng | Action Description Chief Eng | Sign & Date | | | |
| | | | | | | | | |
| | | | | | | | | |
| | | | | | | | | |

NOTE: Date & initial all entries

H:\fFORMS\Quality Assurance\approved QA\NCRWO RevE